ASSEMBLY INSTRUCTION 2630

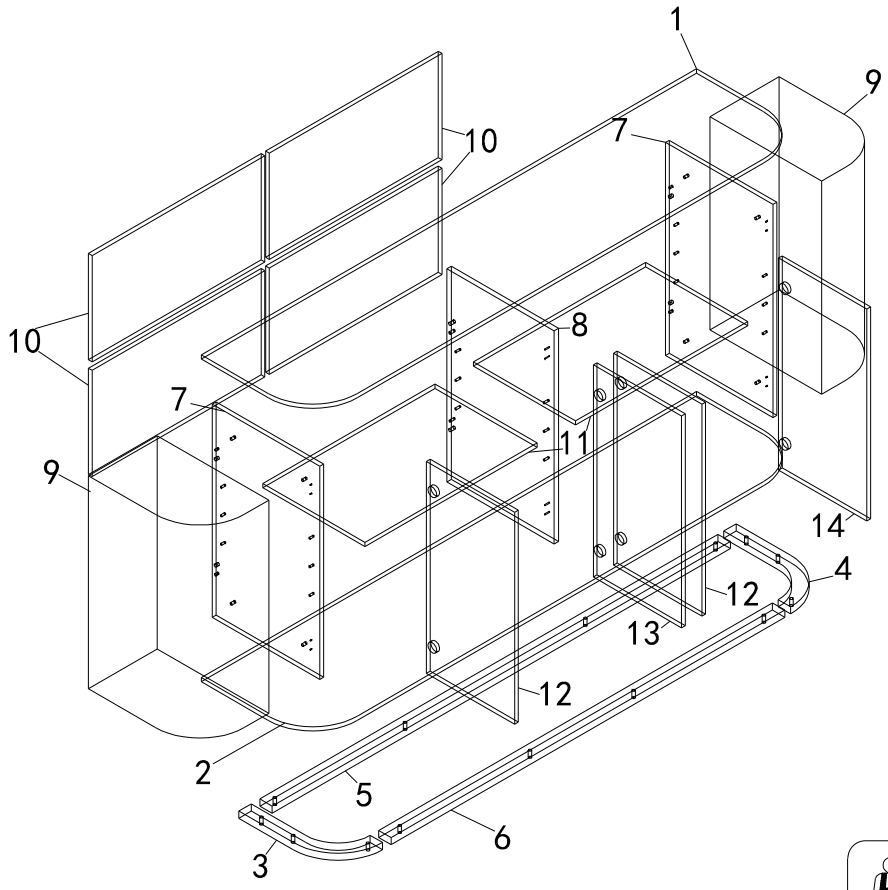

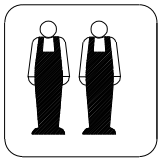



				 ø8X40		 M6*30mm	
A	40pcs	B	40pcs	C	12pcs	D	14pcs
		 M6				 M5	
E	4pcs	F	14pcs	G	8pcs	H	1pcs
 M3.5*14mm		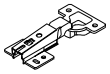				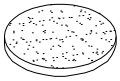	
I	60pcs	J	4pcs	K	4pcs	L	16pcs
 M8*30mm		 M8					
M	8pcs	N	8pcs	O	4pcs		

1

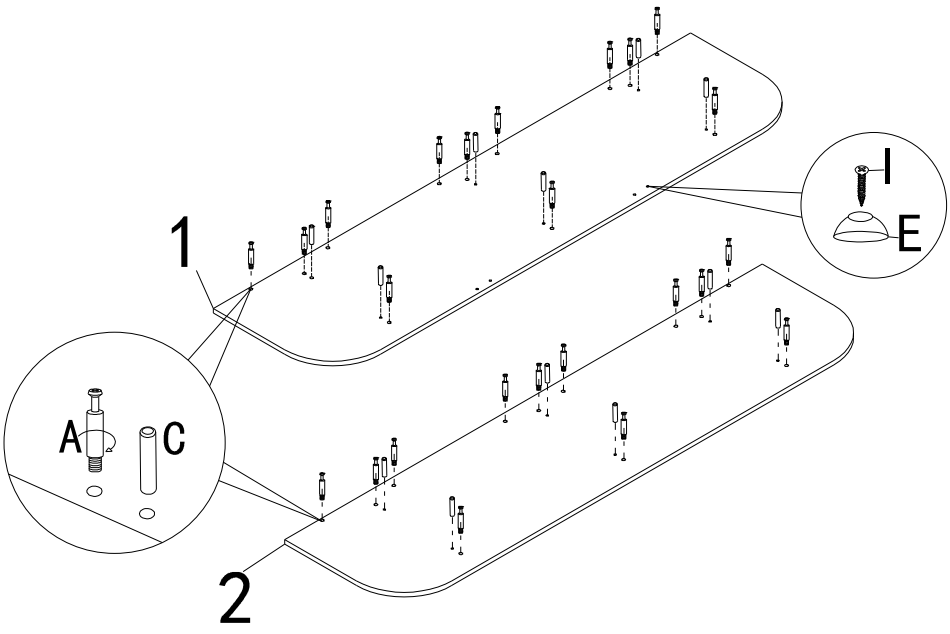

2

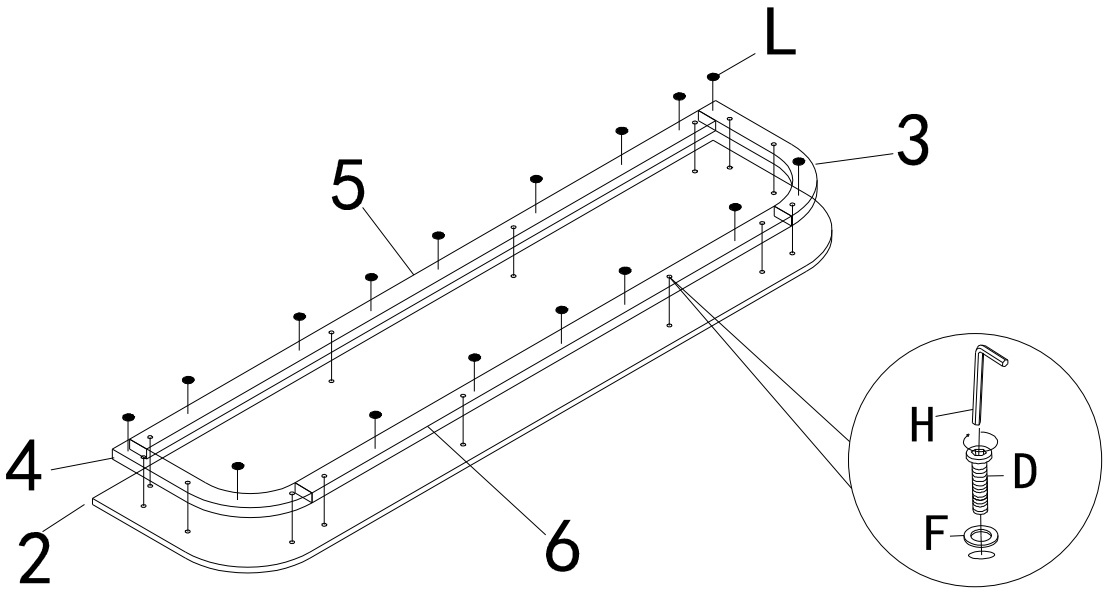

3

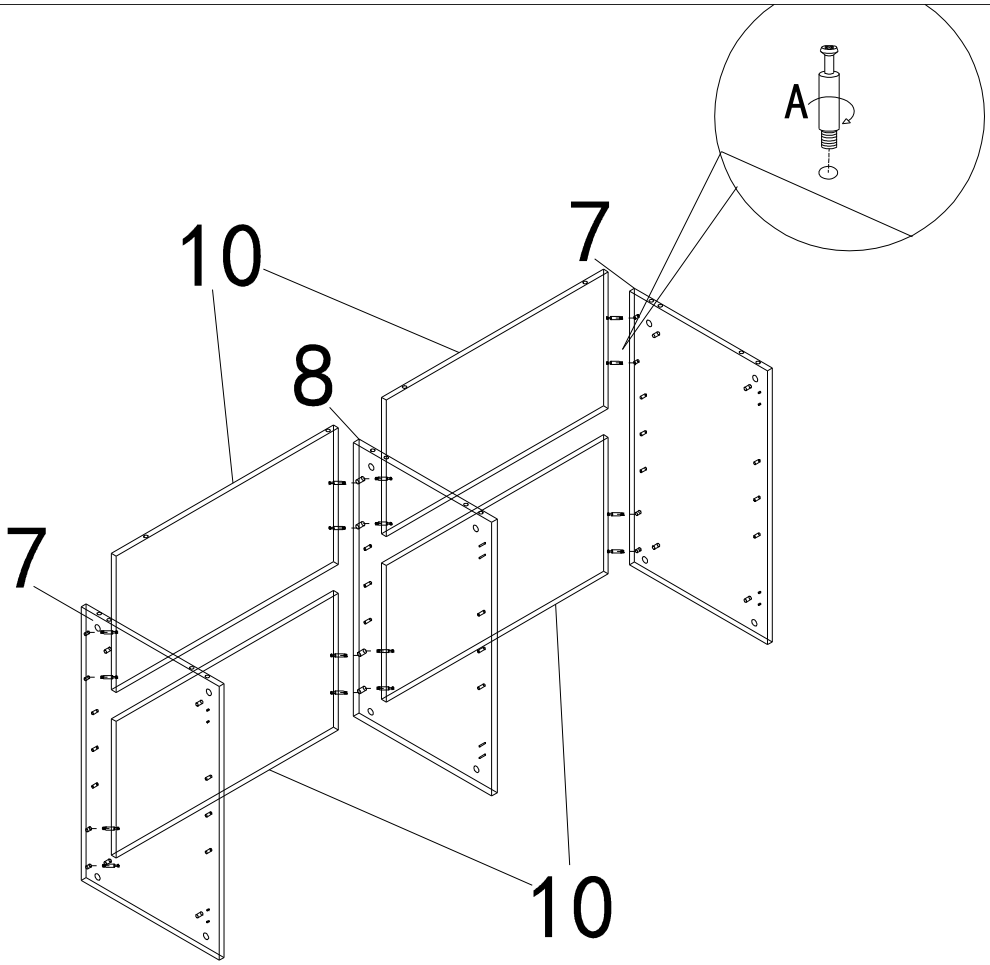

4

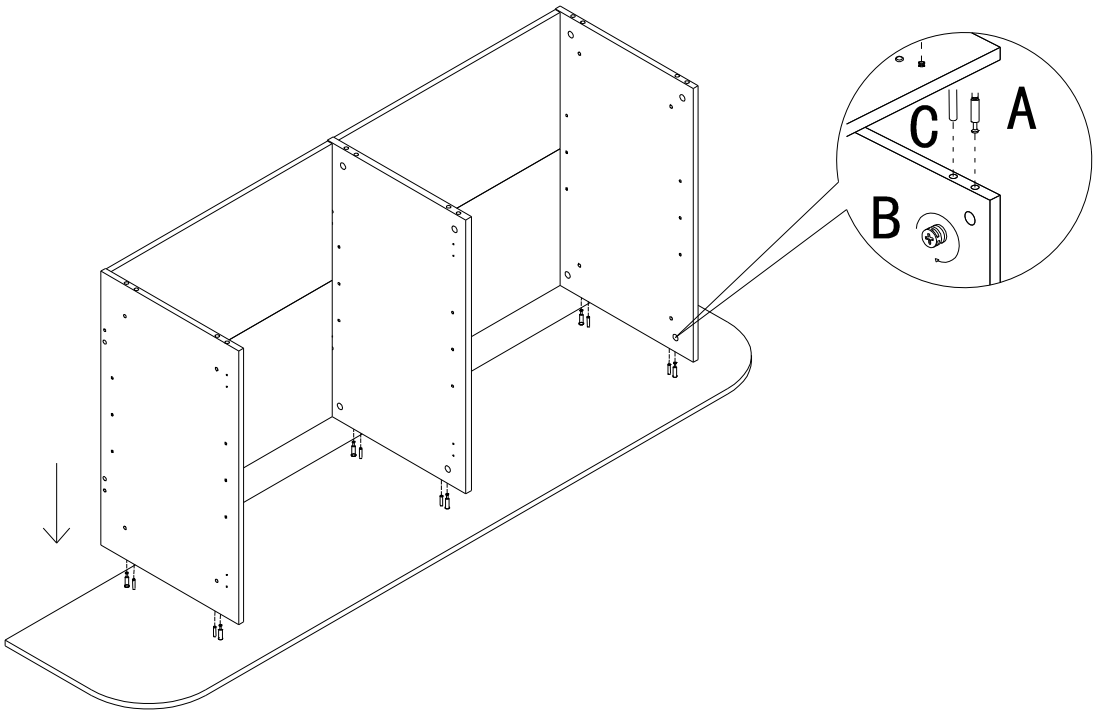

5

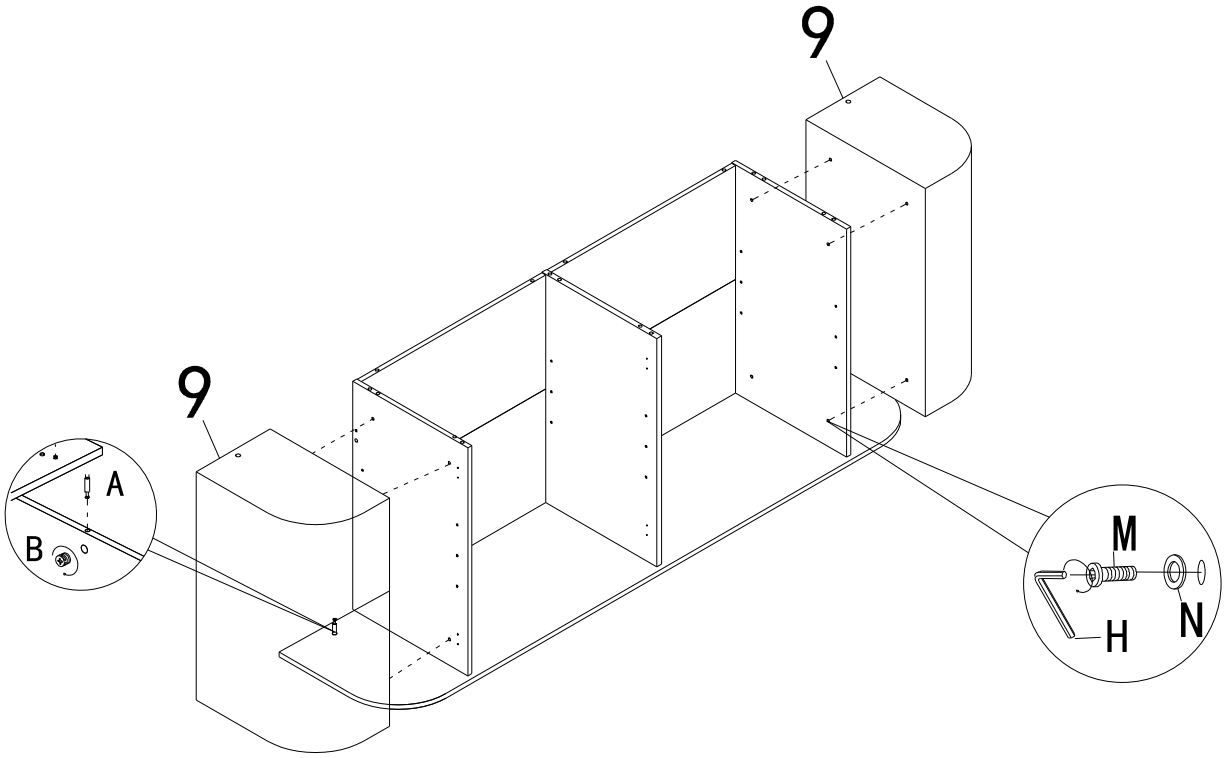

6

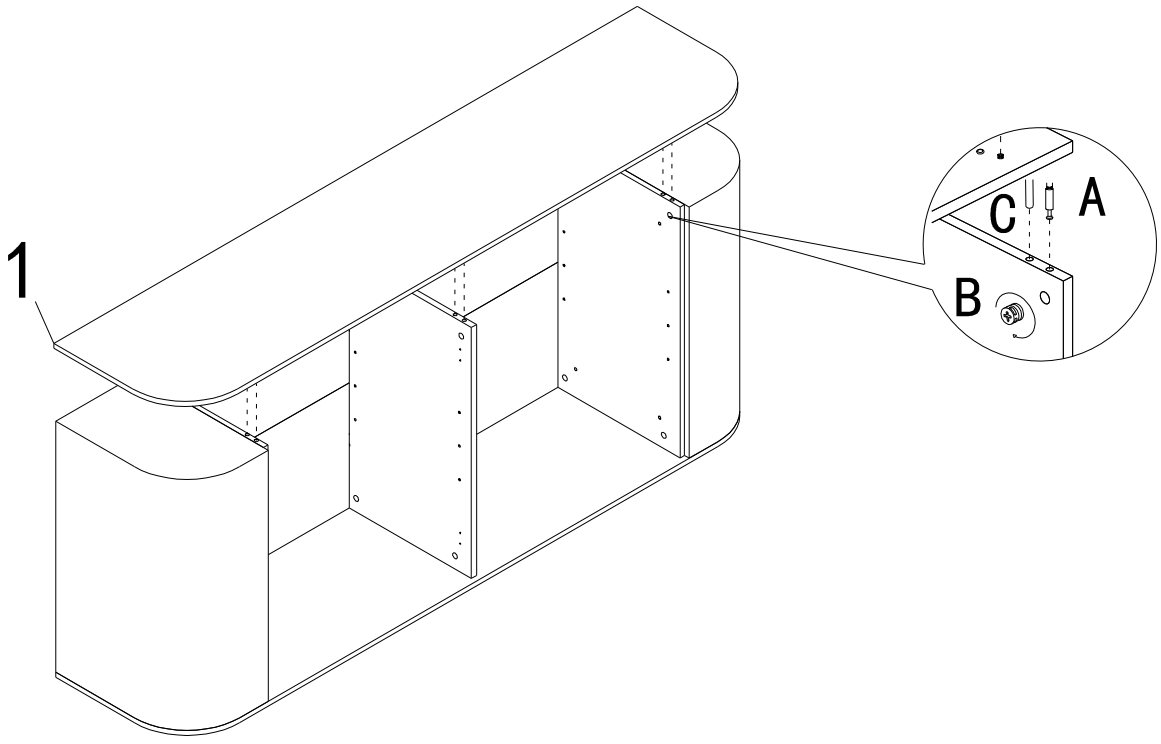

7

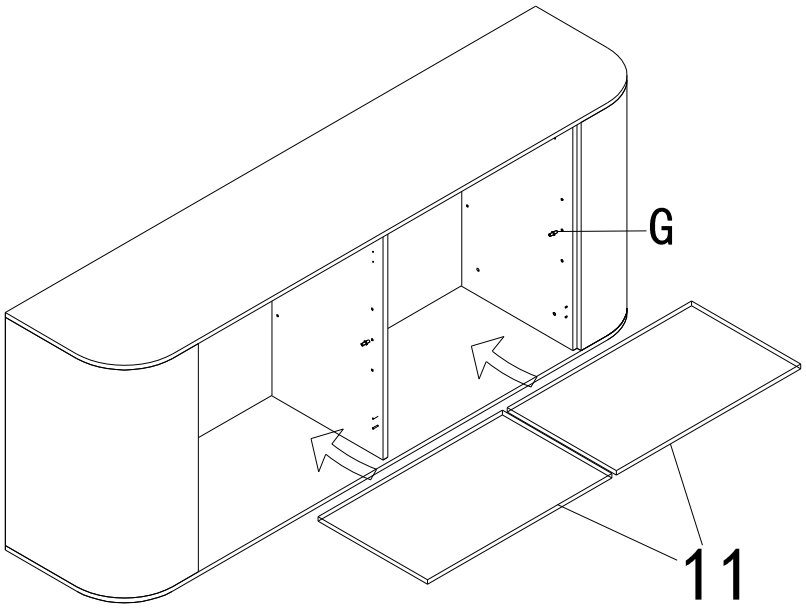

8

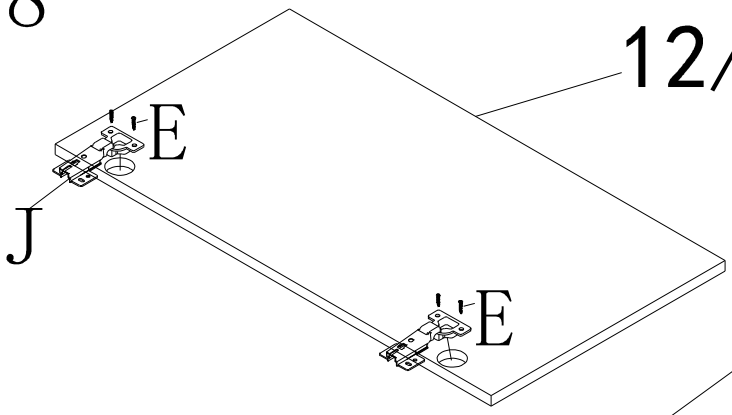

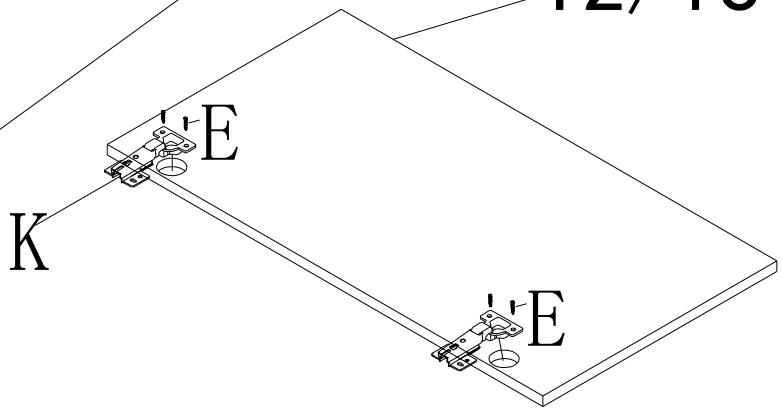

9

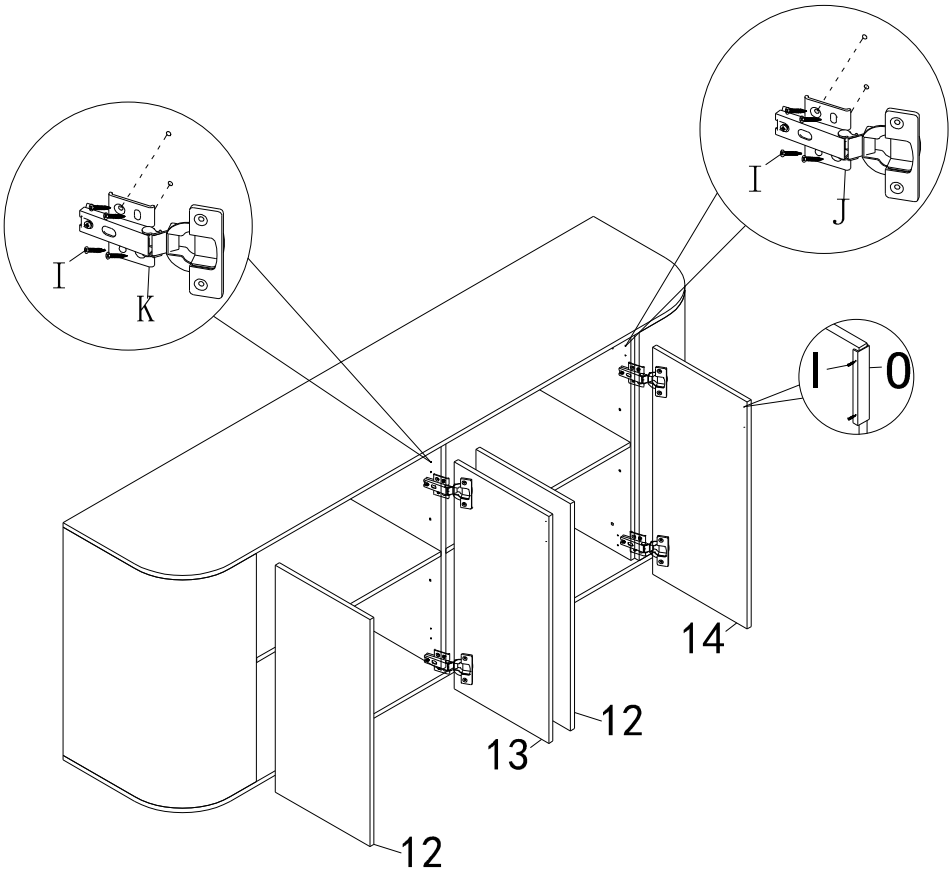

10

