ASSEMBLY INSTRUCTION 5710

1

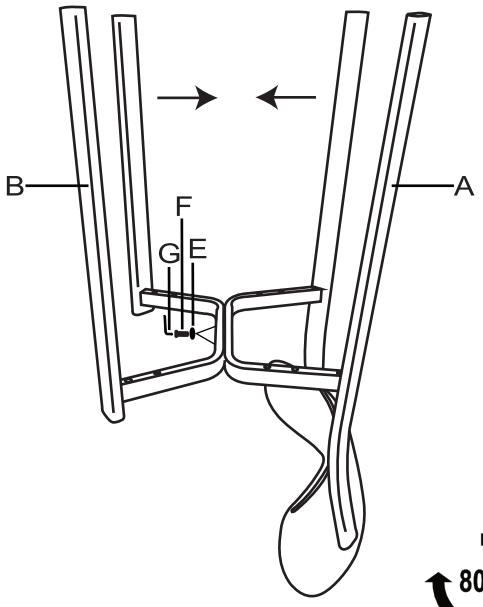

80%

2

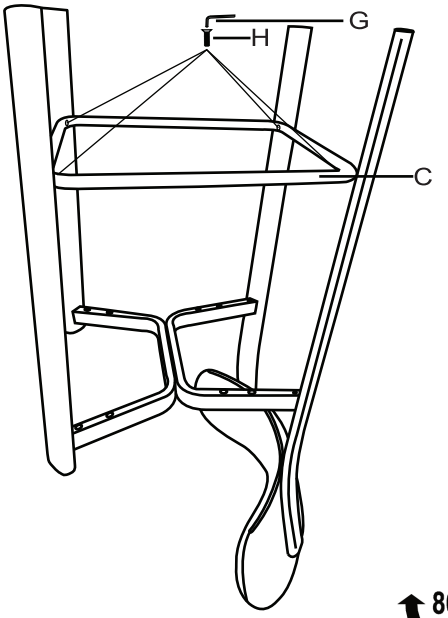

80%

3

80%

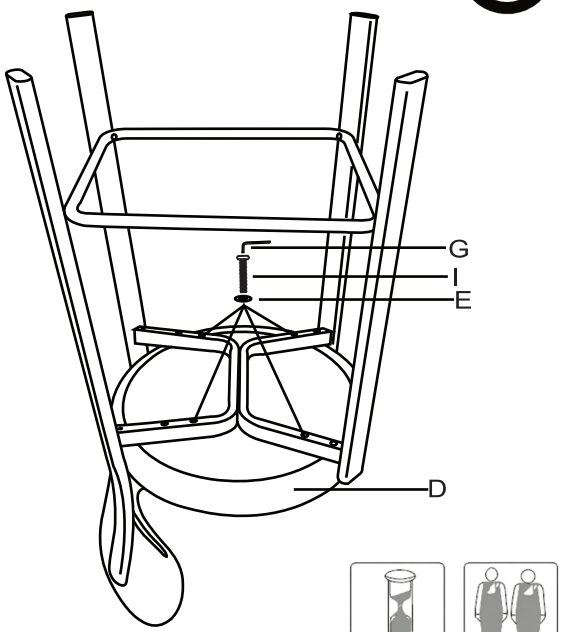

4

100%

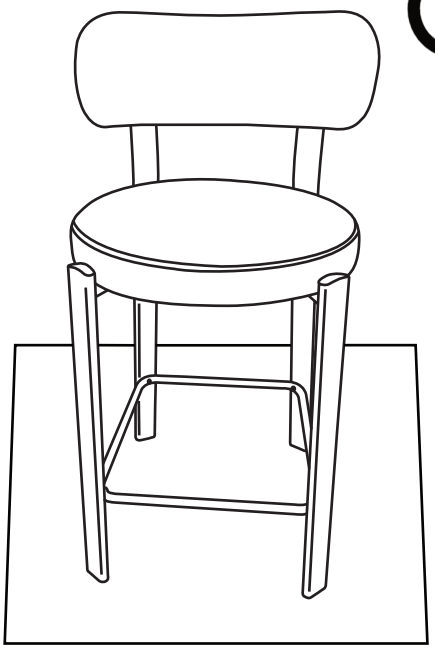

A X 1 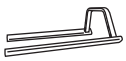	B X 1 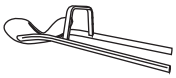	C X 1 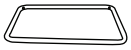	D X 1 	E X 6 
F X 2  M6 X 35mm	G X 1  M4	H X 4  M6 X 25mm	I X 4  M6 X 45mm	